Bill of Materials

Item No.	Qty.	Description	CLM Part No.
1	1	SHIFTING DISC	2A0102-1
2	1	DRIVE CYLINDER	2A0102-2
3	1	HYDRAULIC HOSE "A"	2A0102-3
4	1	HYDRAULIC HOSE "B"	2A0102-4
5	2	90 DEGREE ADAPTER FITTING	2A0102-5
6	2	PISTON ROD JAM NUT	2A0102-6
7	1	ROD BAFFLE	2A0102-7
8	1	ROD SEAL	2A0102-8
9	1	GLAND RETAINER	2A0102-9
10	1	GREASE FITTING	2A0102-10
11	4	ROD PACKING	2A0102-11
12	1	BRASS JUNK RING	2A0102-12
13	1	PISTON ROD	2A0102-13
14	1	FIREWALL/BASE ASSEMBLY	2A0102-14
15	1	SHIFTING ASSEMBLY - 2A_0103	2A0102-15
16	1	CENTER SECTION	2A0102-16
17	1	FLUID PISTON	2A0102-17
18	2	GREASE FITTING ASSEMBLY	2A0102-18
19	1	COWLING	2A0102-19
20	1	BACK PANEL	2A0102-20
21	1	PUMP FLANGE O'RING	2A0102-21
22	12	7/16" x 1.25" NC GRD 5 - BZ	2A0102-22
23	8	3/4" NC GRD 8 LOCKWASHERS - YZ	2A0102-23
24	2	5/8" NC GRD XH NUTS - BZ	2A0102-24
25	16	3/4" NC GRD 8 2H XH NUTS - BZ	2A0102-25
26	2	# 10-32 x 1/2" HEX SCREW - BZ	2A0102-26
27	2	#10 SAE FLAT WASHER - ZINC	2A0102-27
28	1	2" x 1.5" x 5/16" SEAL	2A0102-28
29	1	1.5" -8 THRD GRD 8 2H, XH NUT - BZ	2A0102-29
30	10	1/4" - 20 x 3/4" GRD 5 - BZ	2A0102-30
31	1	5/8" x 1.5" SAE GRD 5 - ZINC	2A0102-31
32	1	5/8" GRD 5 LOCKWASHER - ZINC	2A0102-32
33	10	1/4"-20 INT x 3/8" EXT Keensert	2A0102-33
34	4	3/8"-16 INT x 1/2" EXT Keensert	2A0102-34
35	2	1/2" TIGHT FLAT WASHER - ZINC	2A0102-35
36	4	3/8" TIGHT FLAT WASHER - ZINC	2A0102-36
37	4	1/8" MPT x 3/16" BARB - BRONZE	2A0102-37
38	4	7/8"NFx1-1/8"NF x1.5"THRD INSERT	2A0102-38
39	4	GREASE LINE HOSE CRIMP	2A0102-39
40	36"	3/16" GREASE HOSE	2A0102-40
41	1	1/8" BLACK IRON STEEL ELL	2A0102-41
42	2	1/8"FPTx15/32"O.D. HEX END GR FIT	2A0102-42
43	1	45 DEGREE ADAPTER FITTING	2A0102-43

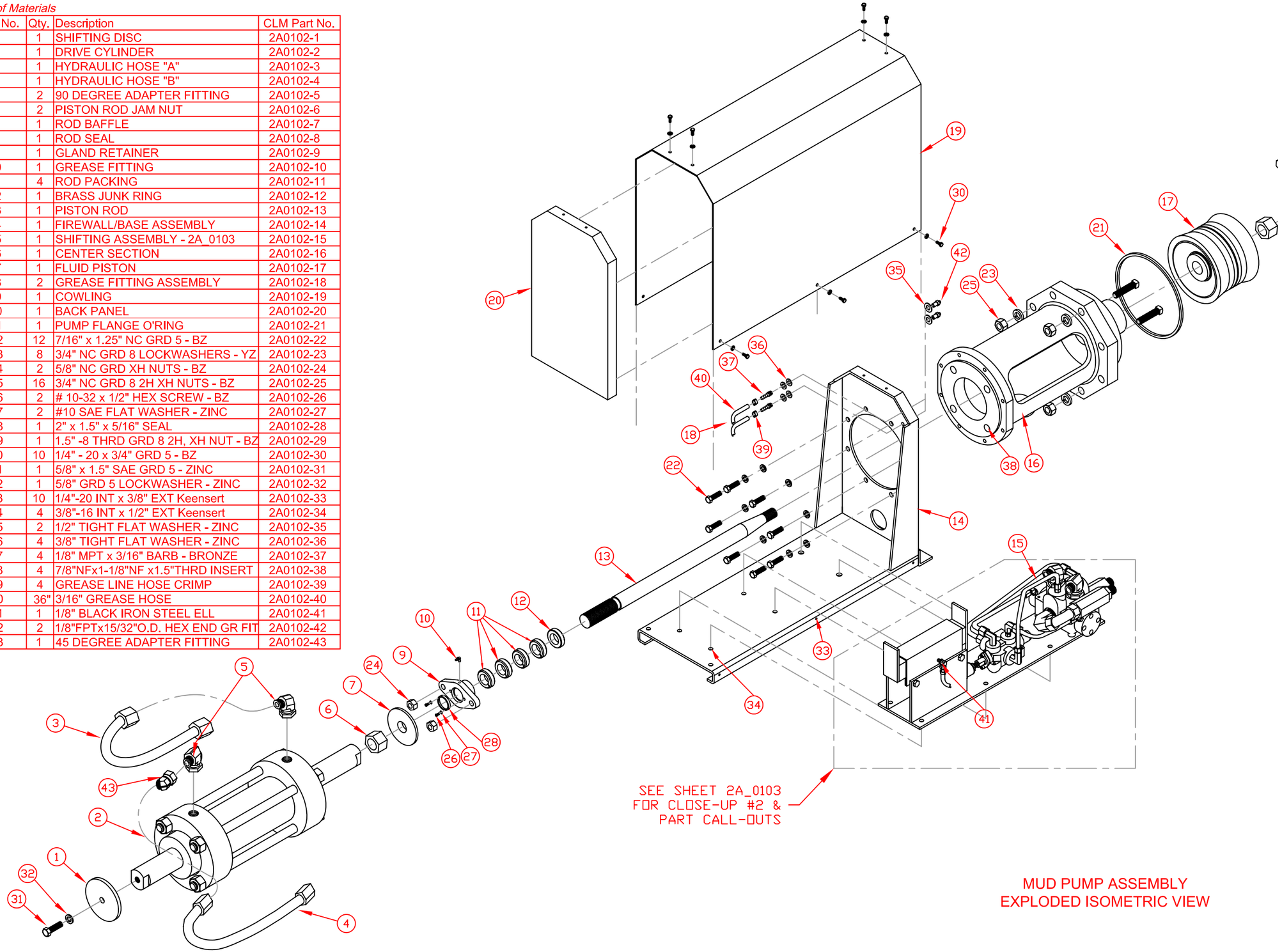

MUD PUMP ASSEMBLY
EXPLODED ISOMETRIC VIEW

General Notes

No.	Revision/Issue	Date
6	2006 Modifications	2.27.07
5	2005 Modifications	1.15.05
4	Set Modifications	12.12.03
3	Set Modifications	9.23.03
2	As built modifieds.	11.24.02
1	Release for construction.	09.03.02

Company Information

Centerline Manufacturing
7355 East S. H. 154
Winnsboro, TX 75494
Ph. #: (903)725-6978

This document contains information which is the property of Centerline Manuf. and is provided on a restricted basis. It is not to be used in any way detrimental to the interests of Centerline Manuf. and may not be copied, transmitted to others or used for manufacturing purposes without the written permission of Centerline Manuf. Recipient agrees to these conditions by acceptance of this drawing.

Drawing Description

Centerline Mud Pump

Isometric Assemblies
Isometric #1

Engineer:	Check Date:	Rev. #:
C. Miller	xx.xx.xx	6
Drawn By: S&S	Drawn Date: 02.27.07	Scale: NTS
Series 2A	Section 01	Sheet 02

File: 2A_0102.DWG

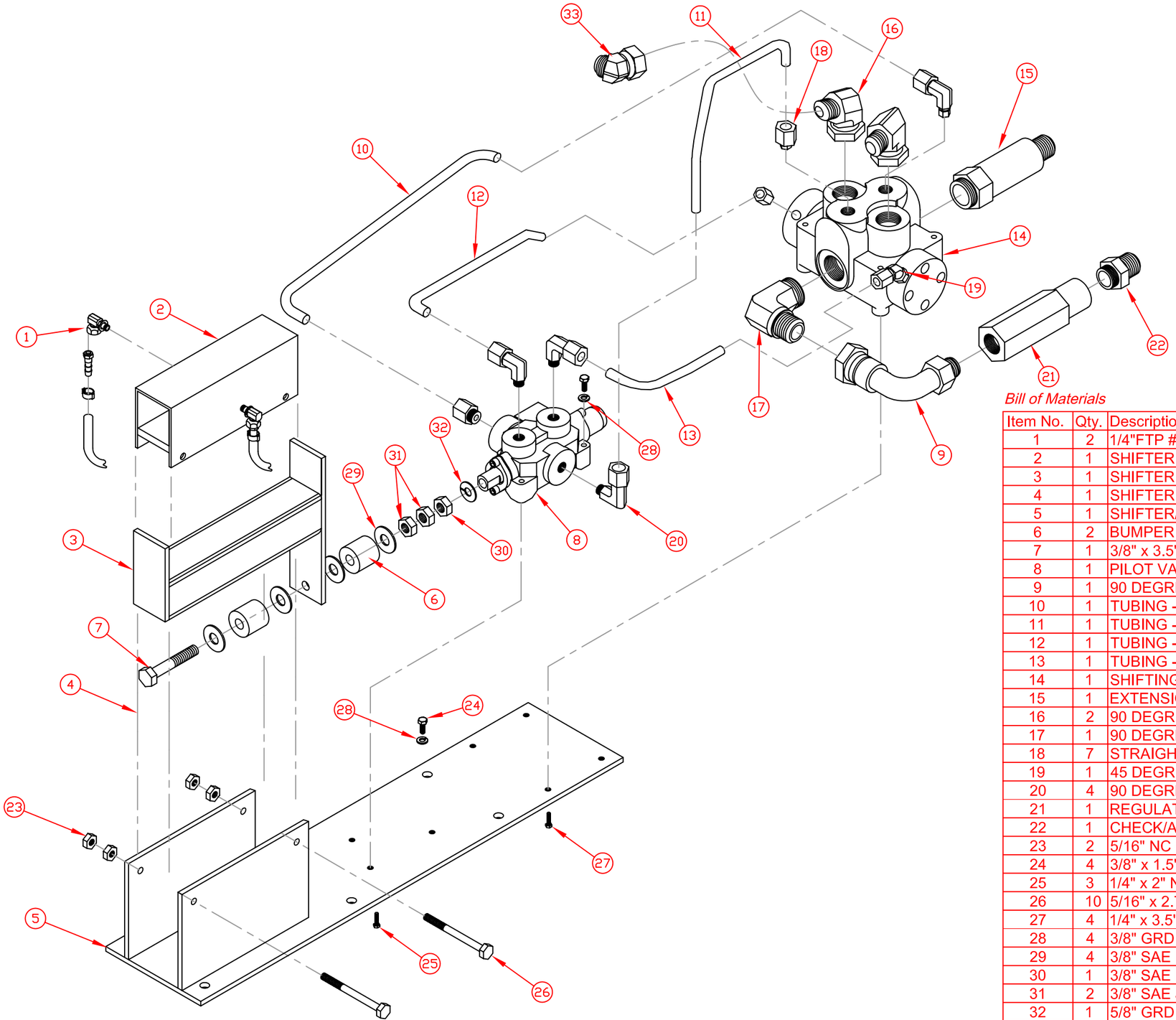

MUD PUMP ASSEMBLY
EXPLODED ISOMETRIC VIEW

Bill of Materials

Item No.	Qty.	Description	CLM Part No.
1	2	1/4"FTP #4SAE BOSS	2A0103-1
2	1	SHIFTER GUIDE	2A0103-2
3	1	SHIFTER	2A0103-3
4	1	SHIFTER GUIDE BASE	2A0103-4
5	1	SHIFTER/VALVE ASSEM. BASE	2A0103-5
6	2	BUMPER PAD	2A0103-6
7	1	3/8" x 3.5" SAE GRD 5 - ZINC	2A0103-7
8	1	PILOT VALVE	2A0103-8
9	1	90 DEGREE SWEEP ADAPTER	2A0103-9
10	1	TUBING - LINE "A"	2A0103-10
11	1	TUBING - LINE "B"	2A0103-11
12	1	TUBING - LINE "C"	2A0103-12
13	1	TUBING - LINE "D"	2A0103-13
14	1	SHIFTING VALVE	2A0103-14
15	1	EXTENSION NIPPLE	2A0103-15
16	2	90 DEGREE HOSE ADAPTER	2A0103-16
17	1	90 DEGREE ADAPTER FITTING	2A0103-17
18	7	STRAIGHT TUBING ADAPTER	2A0103-18
19	1	45 DEGREE TUBING ADAPTER	2A0103-19
20	4	90 DEGREE TUBING ADAPTER	2A0103-20
21	1	REGULATOR VALVE	2A0103-21
22	1	CHECK/ADAPTER	2A0103-22
23	2	5/16" NC CRIMPED LOCK NUTS	2A0103-23
24	4	3/8" x 1.5" NC GRD 5 ZINC	2A0103-24
25	3	1/4" x 2" NC GRD 5- ZINC	2A0103-25
26	10	5/16" x 2.75" NC GRD 5 - ZINC	2A0103-26
27	4	1/4" x 3.5" NC GRD 5 - ZINC	2A0103-27
28	4	3/8" GRD 5 ZINC LOCKWASHER	2A0103-28
29	4	3/8" SAE FLAT WASHER -ZINC	2A0103-29
30	1	3/8" SAE NUT - GRD 5 - ZINC	2A0103-30
31	2	3/8" SAE JAM NUT -GRD 5 - ZINC	2A0103-31
32	1	5/8" GRD 5 LOCKWASHER - ZINC	2A0103-32
33	1	45 DEGREE ADAPTER FITTING	2A0103-33

General Notes

No.	Revision/Issue	Date
6	2006 Modifications	2.27.07
5	2005 Modifications	1.15.05
4	Set Modifications	12.12.03
3	Set Modifications	9.23.03
2	As built modifieds.	11.24.02
1	Release for construction.	09.03.02

Company Information

Centerline Manufacturing
7355 East S. H. 154
Winnsboro, TX 75494
Ph. #: (903)725-6978

This document contains information which is the property of Centerline Manuf. and is provided on a restricted basis. It is not to be used in any way detrimental to the interests of Centerline Manuf. and may not be copied, transmitted to others or used for manufacturing purposes without the written permission of Centerline Manuf. Recipient agrees to these conditions by acceptance of this drawing.

Drawing Description

Centerline Mud Pump
Isometric Assemblies
Isometric #2

Engineer:	Check Date:	Rev. #:
C. Miller	xx.xx.xx	6
Drawn By: S&S	Drawn Date: 02.27.07	Scale: NTS
Series 2A	Section 01	Sheet 03

File: 2A_0103.DWG

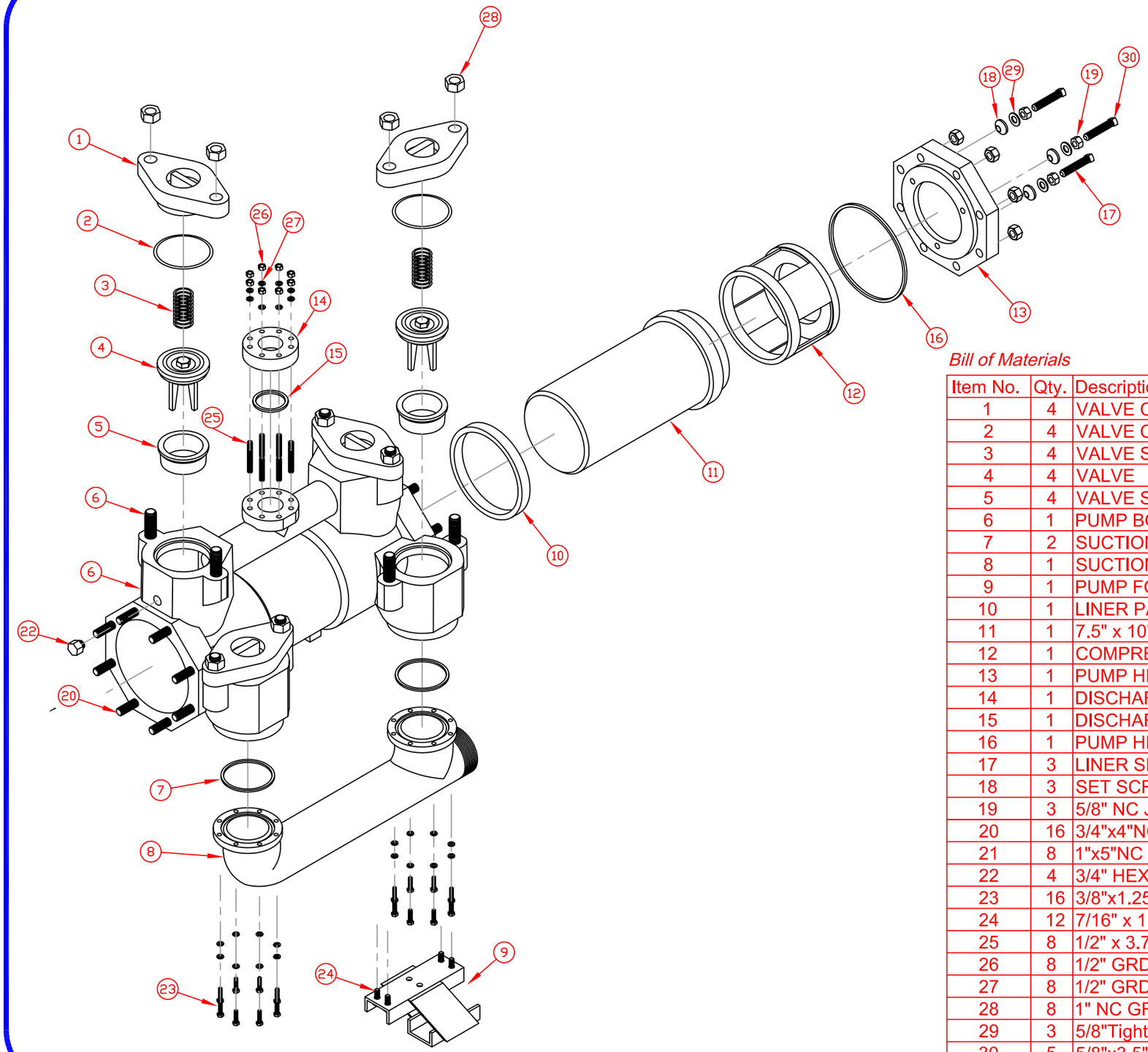

MUD PUMP ASSEMBLY
EXPLODED ISOMETRIC VIEW

Bill of Materials

Item No.	Qty.	Description	CLM Part No.
1	4	VALVE COVER	2A0104-1
2	4	VALVE COVER GASKET	2A0104-2
3	4	VALVE SPRING	2A0104-3
4	4	VALVE	2A0104-4
5	4	VALVE SEAT	2A0104-5
6	1	PUMP BODY	2A0104-6
7	2	SUCTION MANIFOLD O'RING	2A0104-7
8	1	SUCTION MANIFOLD	2A0104-8
9	1	PUMP FOOT	2A0104-9
10	1	LINER PACKING	2A0104-10
11	1	7.5" x 10" LINER	2A0104-11
12	1	COMPRESSION RING	2A0104-12
13	1	PUMP HEAD FLANGE	2A0104-13
14	1	DISCHARGE FLANGE	2A0104-14
15	1	DISCHARGE FLANGE O'RING	2A0104-15
16	1	PUMP HEAD O'RING	2A0104-16
17	3	LINER SET SCREW	2A0104-17
18	3	SET SCREW PACKING	2A0104-18
19	3	5/8" NC JAM NUT - BZ	2A0104-19
20	16	3/4"x4"NC B7 STUD (1.5Tx1x1.5T)-BZ	2A0104-20
21	8	1"x5"NC B7 STUD (2Tx1.5Tx1.5T)-BZ	2A0104-21
22	4	3/4" HEX HEAD PIPE PLUG	2A0104-22
23	16	3/8"x1.25" NC ALLEN HD GRD 5-BZ	2A0104-23
24	12	7/16" x 1.25" NC GRD 5- BZ	2A0104-24
25	8	1/2" x 3.75" NC B7 STUD - BZ	2A0104-25
26	8	1/2" GRD 8 NUTS - BZ	2A0104-26
27	8	1/2" GRD LOCKWASHER - YZ	2A0104-27
28	8	1" NC GRD 8 2H XH NUTS - BZ	2A0104-28
29	3	5/8"Tight Fit Hvy Duty Flt Washer-YZ	2A0104-29
30	5	5/8"x3.5"NC Grd 8 Sq Hd Set Bolt-BZ	2A0104-30

General Notes

No.	Revision/Issue	Date
6	2006 Modifications	2.27.07
5	2005 Modifications	1.15.05
4	Set Modifications	12.12.03
3	Set Modifications	9.23.03
2	As built modifieds.	11.24.02
1	Release for construction.	09.03.02

Company Information

Centerline Manufacturing
7355 East S. H. 154
Winnsboro, TX 75494
Ph. #: (903)725-6978

This document contains information which is the property of Centerline Manuf. and is provided on a restricted basis. It is not to be used in any way detrimental to the interests of Centerline Manuf. and may not be copied, transmitted to others or used for manufacturing purposes without the written permission of Centerline Manuf. Recipient agrees to these conditions by acceptance of this drawing.

Drawing Description

Centerline Mud Pump
Isometric Assemblies
Isometric #3

Engineer:	Check Date:	Rev. #:
C. Miller	xx.xx.xx	6
Drawn By: S&S	Drawn Date: 02.27.07	Scale: NTS
Series 2A	Section 01	Sheet 04

File: 2A_0104.DWG